Global D Therapeutic arsenal

ANCOTEK

Orthodontic anchorage

Global D
Partner for your surgery

Partner for your surgery

Global D, the product of SERF® (1973) and tekka® (2000) joining forces, is a French company specialised in the design, manufacturing and sale of medical devices intended for dental, orthodontic and maxillofacial surgery.

With **more than 15 years** of clinical and manufacturing experience in maxillofacial surgery, Global D is now the top French company in this area.

With our R&D department providing our clients with continuous improvements, we collaborate with surgeons to design **innovative product ranges.**

Our mission is to help surgeons to work better and to optimize patient care.

ANCOTEK

ANCOTEK is a mature and complete range dedicated to orthodontic bone anchorage. This is a large mini-screw panel with several types of screw head, and anchorage plates, thus covering all treatment indications.

Global D

Partner for your surgery

Global D - ZI de Sacuny - 118 av. Marcel Mérieux - 69530 Brignais - FRANCE
tel. +33 (0)4 78 56 97 00 - fax +33 (0)4 78 56 01 63 - www.globald.com

Made in **France**

Performance for your expertise

A commitment to service

Because the patient is your priority.

Our mission: to provide you with solutions and management systems to make your work easier day to day.

Global D adapts to your practice and guarantees a responsive service.

A personalised response: marketing and administrative team provides assistance from 8.30 am to 6.00 pm from Monday to Friday (local time).

The product commitment

Because the product should be at the service of your practice.

Each of our product lines comprises ergonomic devices, which are adapted to the development of your technique. All of our products, which are coloured by anodic oxidation, are easily identifiable and offer an additional guarantee of safety for the patient.

The quality commitment

Because customer satisfaction is everybody's business.

Always attentive to the need of practitioners, our teams commit their energy to continually optimize our services, procedures, and support, above and beyond simple compliance with the regulatory standards.

To maintain the highest possible performance, we purposely sought out LNE/G-MED (a French notified body) to certify our quality system and our product lines.

CE 0459

Skeletal anchorage range

INTRODUCTION **5**

Technical specificities 5

THE MINI-SCREWS **6**

The concept 6

Presentation 7

Vestibular pin-head screw 8

Palatal pin-head screw 9

Bracket screw 10

Cross-drive screw 11

Short cortical screw 12

ANCILLARY EQUIPMENT **13**

Optional instruments 13

THE PLATES **14**

The concept 14

Presentation 15

T-shaped plate 16

I-shaped plate 17

THE KIT **18**

Standard composition of the kit 18

These products are medical devices of class I, IIa, IIb classes and carry the CE marking in accordance with Directive 93/42/EEC. It is possible that medical devices presented are not available for sale in all countries. Please contact the sales department of Global D for more information on product availability.

Please check the instructions before use. If in doubt please contact the sales department of Global D.

The instructions may in some cases be dematerialized. For that, a QR code and a URL link are provided on the label of the device. However, printed instructions are available on request within a week. The request must be made to the following address: quality@globald.com

Why choose titanium?

All the mini-screws and anchorage plates supplied by Global D are made of titanium.

This metal has numerous advantages, including:

- malleable without shape memory,
- excellent mechanical resistance ,
- biocompatibility ,
- non-magnetic with no artefacts on radiography.

A colour code has been devised to enable rapid and simple identification of the diameters of the mini-screws.

Titanium can be anodised, which is an electrolytic oxidation process for ionic alteration of the surface, thus enabling various colours without the addition of other materials.

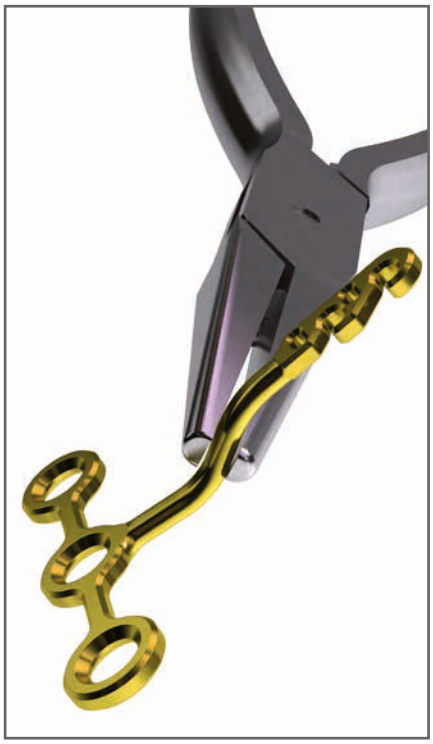

A self-drilling screw thread

Global D, with its extensive experience and its number one position in Maxillofacial surgery gained over the past 15 years, have concentrated all of their technical expertise in the anchorage mini-screws.

The quality of the self-drilling thread of the osteosynthesis screws has been applied to all anchorage mini-screws.

The asymmetric thread has wider wings for better primary bone fixation. The screw tip has been sharpened to ensure the thread penetration into the bone. In addition, the quality of the self-drilling results in improved evacuation of the shavings and thus improves the penetrating power of the screw.

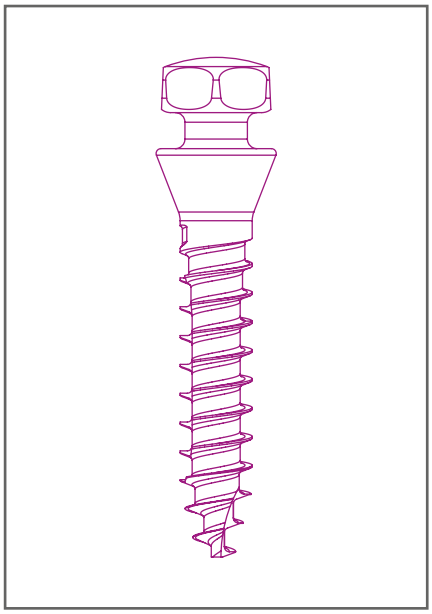

Anchorage mini-screws

The concept

The objective of the anchorage mini-screws is to create a a fixed point in order to obtain reliable, high-quality anchorage.

The use of bone anchors enables:

• an optimisation of current techniques by improving control,

• new movements and the management of cases that were previously impossible or at least difficult to treat .

It is therefore an effective alternative as a complement to current techniques, or as a replacement.

Presentation

A complete range

- Wide panel of screw heads
- Self-drilling thread
- Identification of the diameter by colour code
- Simple and ergonomic associated handling tools

Colour code

- 1,2 mm
- 1,5 mm
- 2 mm

Transmucosal anchorage

Cross-drive screw

Bracket screw

Vestibular pin-head screw

Palatal pin-head screw

Submucosal anchorage

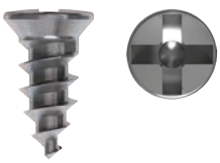

Short cortical screw

Pin-head screw

Transmucosal **vestibular** anchorage

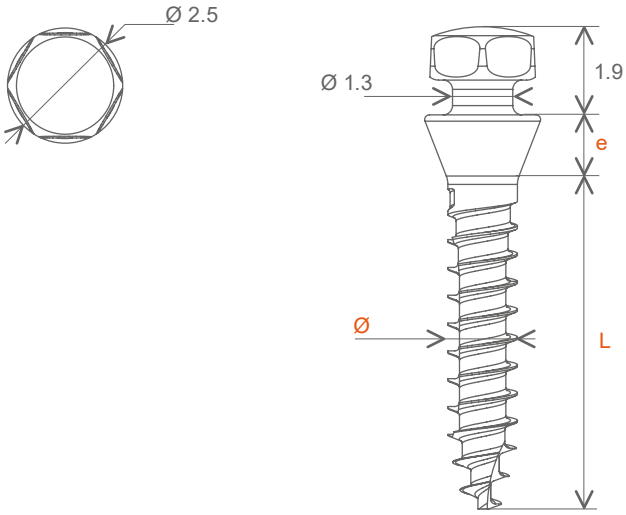

Vestibular pin-head screw

	Colour code	Diameter Ø	Ledge e	Package	Ref. number L 7 mm	Ref. number L 9 mm		Associated drill bit
		1.2 mm	1.5 mm	Non sterile	OVTPCV1.2L7	OVTPCV1.2L9		FOS0.8
				Sterile*	EVTPCV1.2L7	-		
		1.5 mm		Non sterile	OVTPCV1.5L7	OVTPCV1.5L9		FOS1.1
				Sterile*	EVTPCV1.5L7	EVTPCV1.5L9		

*EASYTEK ANCOTEK sterile pack

- Tracability via batch number
- The ergonomics and the simplicity of the pack
- A « ready to use » solution of a sterile product
- Easy impaction of the screw

Handling tools: specific ancillary materials

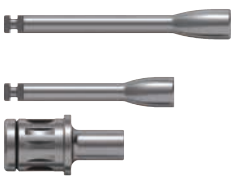

Description	Diameter of associated screw	Length	Ref. number
Bell wrench for screwdriver	1.2 mm 1.5 mm	Extra-long	AXLCC2.2
		Short	ACC2.2
Contra-angle bell wrench		Extra Short	AXCC2.2
Manual bell wrench		Short	ACCM2.2
Ratchet wrench (see page 13)			DCCLIC2

Auxiliary:

- Elastomeric chain
- Elastic
- Metal ligature
- NiTi spring

Pin-head screw

Transmucosal **palatine** anchorage

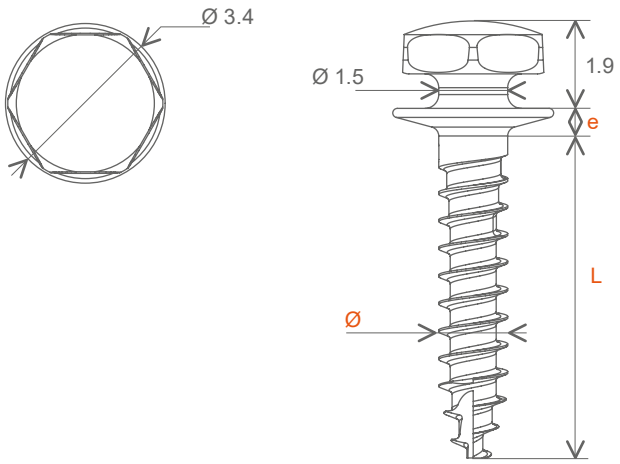

Palatal pin-head screw

	Colour code	Diameter Ø	Ledge e	Package	Ref. number L 7 mm	Ref. number L 9 mm		Associated drill bit
		1.2 mm	0.6 mm	Non sterile	OVTPCP1.2L7	OVTPCP1.2L9		FOS0.8
				Sterile*	EVTPCP1.2L7	-		
		1.5 mm		Non sterile	OVTPCP1.5L7	OVTPCP1.5L9		FOS1.1
				Sterile*	EVTPCP1.5L7	EVTPCP1.5L9		

*EASYTEK ANCOTEK sterile pack

- Tracability via batch number
- The ergonomics and the simplicity of the pack
- A « ready to use » solution of a sterile product
- Easy impaction of the screw

Handling tools: specific ancillary materials

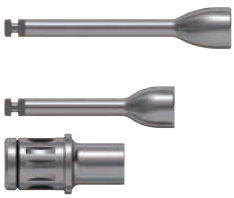

Description	Diameter of associated screw	Length	Ref. number
Bell wrench for screwdriver	1.2 mm 1.5 mm	Extra-long	AXLCC3
		Short	ACC3
Contra-angle bell wrench		extra Short	AXCC3
Manual bell wrench		Short	ACCM3
Ratchet wrench (see page 13)			DCCLIC2

Auxiliary:

- Elastomeric chain
- Elastic
- Metal ligature
- NiTi spring

Bracket screw

Transmucosal anchorage

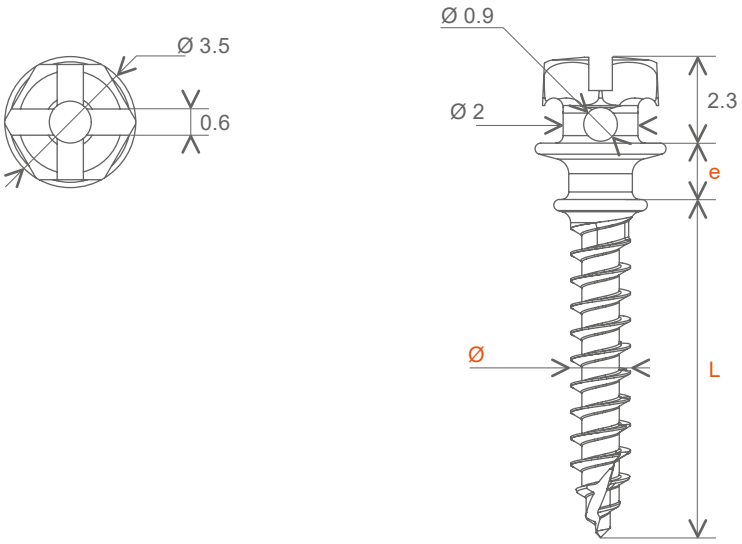

Bracket screw

	Colour code	Diameter Ø	Ledge e	Ref. number L 7 mm	Ref. number L 9 mm	Ref. number L 11 mm		Associated drill bit
		1.5 mm	1.5 mm	OVB1.5L7F1.5	OVB1.5L9F1.5	-		FOS1.1
		2 mm		OVB2L7F1.5	OVB2L9F1.5	-		
			3 mm		OVB2L9F3	OVB2L11F3		

Handling tools: specific ancillary materials

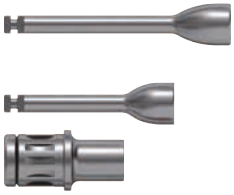

Description	Diameter of associated screw	Length	Ref. number
Bell wrench for screwdriver	1.2 mm 1.5 mm	Extra-long	AXLCC3
		Short	ACC3
Contra-angle bell wrench		extra Short	AXCC3
Manual bell wrench		Short	ACCM3
Ratchet wrench (see page 13)			DCCLIC2

Auxiliary:

- Elastomeric chain
- Metal ligature
- 0.0215 x 0.0215 TMA arch
- Rectangular arch
- 0.022 x 0.028 or round 0.022
- NiTi spring

Cross-drive screw

Transmucosal anchorage

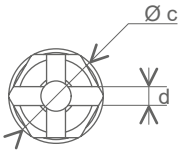

Ø	1,2 - 1,5 mm & 2S	2 mm
a	2.5 mm	2.6 mm
b	1.8 mm	2.5 mm
c	2.5 mm	3.4 mm
d	0.5 mm	0.6 mm

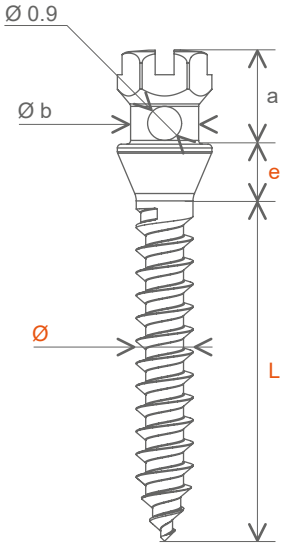

Cross-drive screw

	Colour code	Diameter Ø	Ledge e	Ref. number L 7 mm	Ref. number L 9 mm	Ref. number L 11 mm		Associated drill bit
		1.2 mm	1.5 mm	OV1.2L7H1	OV1.2L9H1	-		FOS0.8
		1.5 mm		OV1.5L7H1	OV1.5L9H1	OV1.5L11H1		FOS1.1
OV2 OV2S*		2 mm		OV2L7H1	OV2L9H1	OV2L11H1		
				OV2SL7H1	OV2SL9H1	OV2SL11H1		

* OV2S: Use the handling tools for Ø 1.5 mm screws

Handling tools: specific ancillary materials

Description	Diameter of associated screw	Length	Ref. number
Cross-drive shaft for screwdriver	1.2 mm 1.5 mm	Short	ACT1K
	2 mm		ACT2K-2
Cross-drive shaft for contre angle	1.2 mm 1.5 mm	Extra Short	AXCT1K
	2 mm		AXCT2K-2
Ratchet wrench (see page 13)			DCCLIC2

Auxiliary:

- Elastomeric chain
- Elastic
- Metal ligature
- NiTi spring

Pad

Diameter of associated screw	Ref. number
1.2 mm 1.5 mm	OCV1
2 mm	OCV2

Short cortical screw

Sub-mucosal anchorage

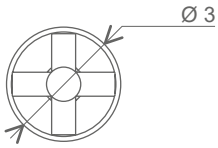

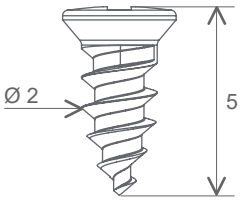

- Self-drilling thread
- No needed pre-drilling
- Bone preservation
- Colour code to identify the diameter
- Prehension shaft/screw head insured
- Stability during screwing

Dr. Daniel CHILLES' short cortical screw - Ø 2 mm

(Orthodontist - Belfort)

	Colour code	Length	Ref. number
		5 mm	VA2KL5

Auxiliary:

- Metal ligature
- TMA arch Ø 0.45

Handling tools: specific ancillary materials

	Axe	Empreinte	Diameter of associated screw	Ref. number
	Long	Cruciforme	2 mm	ALT2K-2

This screw is used for sub-mucosal orthodontic anchorage

Surgical protocol

1. Local anaesthesia
2. Incision with a scapel blade over approximately twelve millimetres
3. Lift the soft tissues of the bone using a periostal elevator up to the chosen site for screw placement
4. Screw blindly after fitting the ligation ring or loop of suture that will exit via the incision line
5. No sutures needed
6. Immediate orthodontic loading

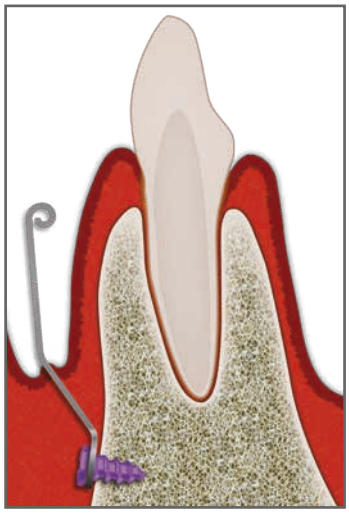

Optional instruments

Ceramic bur

	Description	Ref. number
	Haemostatic ceramic bur for turbine	F24017

Screwdriver handle

	Description	Ref. number
	Handle for self –retaining shaft	MTM

Pointer

	Description	Ref. number
	Pointer for pre-drilling	ODRILL

Long shaft

	Description	Diameter of associated screw	Length	Ref. number
	Self-retaining shaft	1.2 mm 1.5 mm	long	ALT1K
		2 mm		ALT2K-2

Ratchet wrench

	Description	Ref. number
	Ratchet wrench	DCCLIC2

Anchorage plates

The concept

The use of anchorage plates makes it possible to consider a global retraction movement using only one system.

They also reduce superfluous movements thus limiting movements to the intended ones.

Plate anchorage is indicated when the use of anchorage mini-screws is difficult, insufficient, or when they do not allow some movements.

Presentation

Specific indications:
Global teeth retraction in case several movements need to be combined.

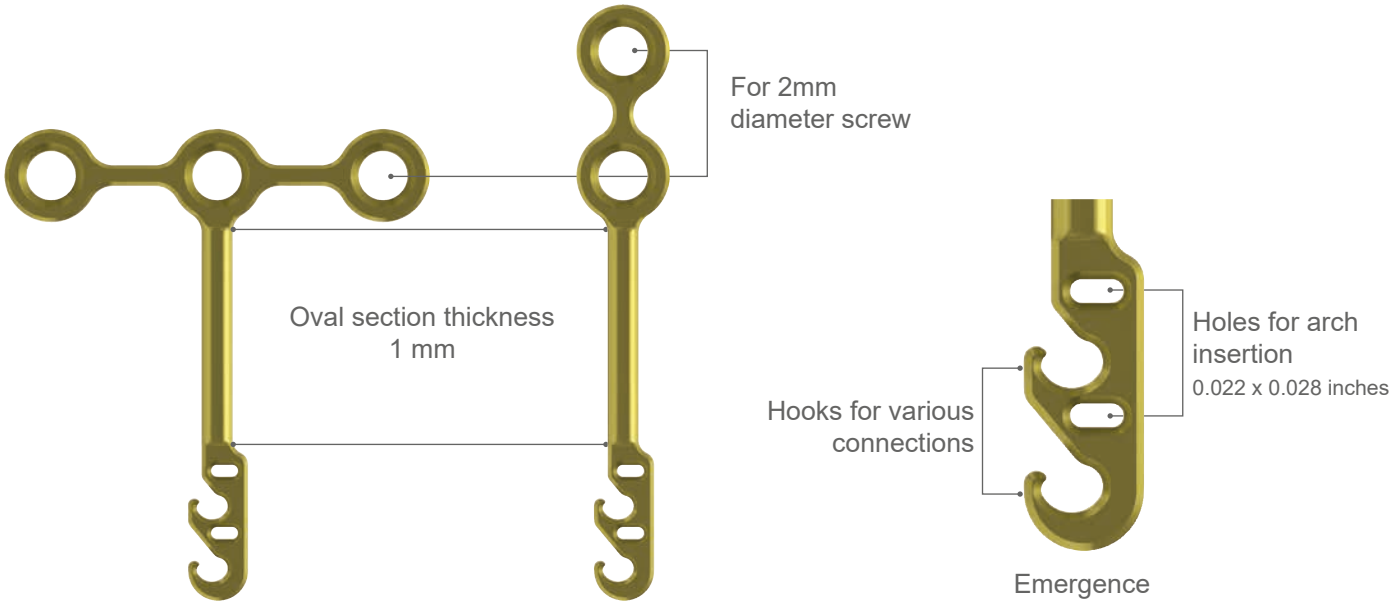

- **Grade 2 titanium** for easy plate conformation
- **2 shapes** of plate available in a variety of lengths
- **1 common plate emergence** enabling the use of **many ancillary materials**

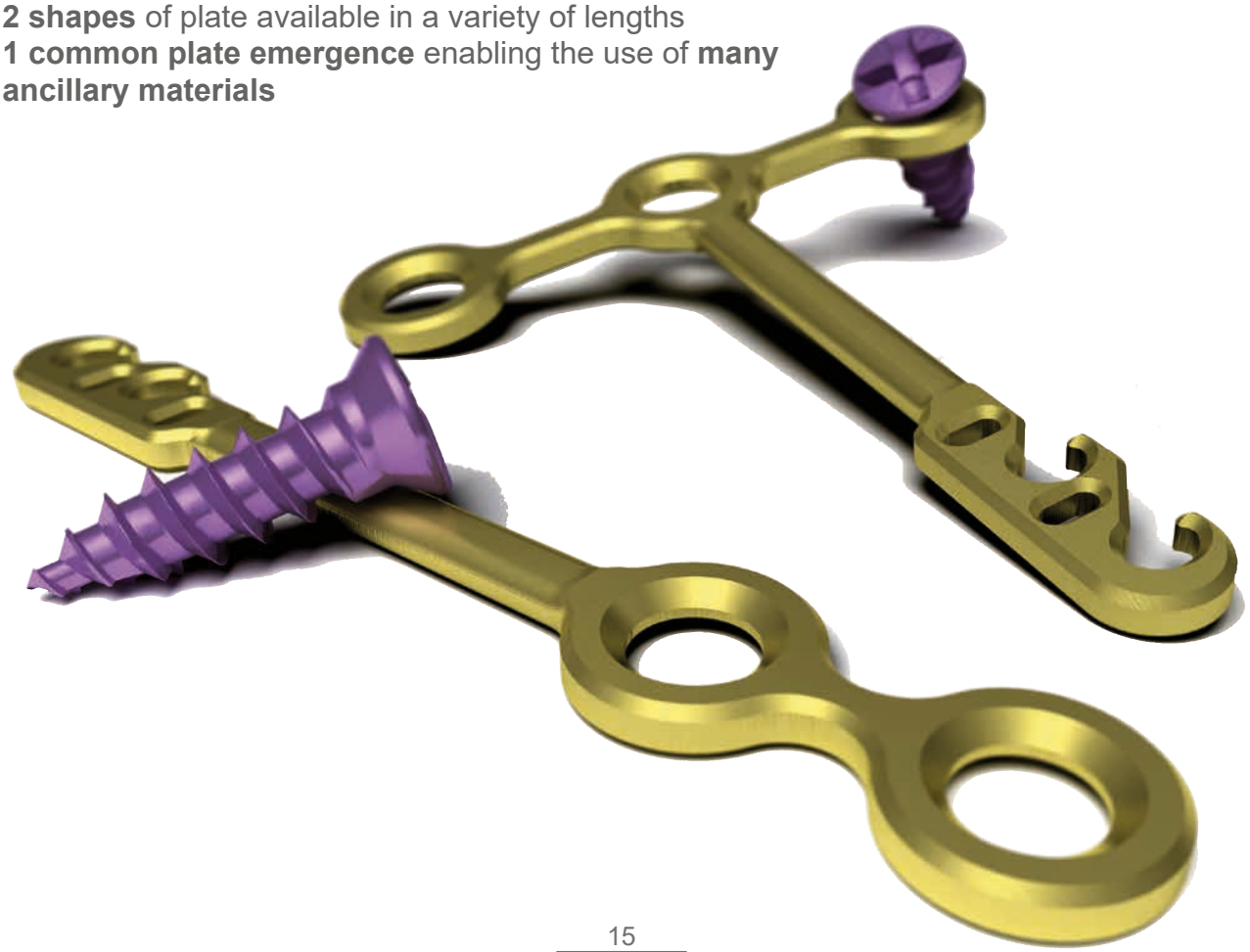

T-shaped plate

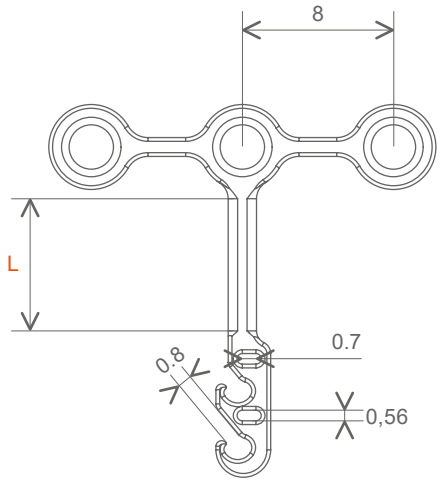

Single T-shaped plate

Description	Ref. number			
	L 5 mm	L 7 mm	L 10 mm	L 12 mm
T-shaped plate	OAT5	OAT7	OAT10	OAT12

Packs for T-shaped plate

Packaging	Content	Ref. number
Sterile pack	1 plate + 2 screws*	EAT5
		EAT7
		EAT10
		EAT12
Non sterile pack	1 plate + 2 screws*	OPAT5
		OPAT7
		OPAT10
		OPAT12

*VA2KL5 (self-drilling screw, Ø 2 mm and 5 mm length)

Handling tools

Description	Length	Ref. number
Screwdriver handle		MTM
Self-retaining shaft	Short	ACT2K-2
	long	ALT2K-2

Auxiliary:

- Elastomeric chain
- Metal ligature
- 0.0215 x 0.0215 TMA arch
- Rectangular arch
- 0.022 x 0.028 or round 0.022
- NiTi spring

I-shaped plate

Single I-shaped plate

Description	Ref. number			
	L 5 mm	L 7 mm	L 10 mm	L 12 mm
I-shaped plate	OAI5	OAI7	OAI10	OAI12

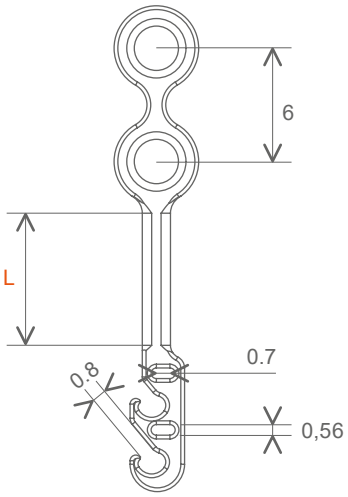

Packs for I-shaped plate

Packaging	Content	Ref. number
Sterile pack	1 plate + 2 screws*	EAI5
		EAI7
		EAI10
		EAI12
Non sterile pack	1 plate + 2 screws*	OPAI5
		OPAI7
		OPAI10
		OPAI12

*VA2KL5 (self-drilling screw, Ø 2 mm and 5 mm length)

Handling tools

Description	Length	Ref. number
Screwdriver handle		MTM
Self-retaining shaft	Short	ACT2K-2
	long	ALT2K-2

Auxiliary:

- Elastomeric chain
- Metal ligature
- 0.0215 x 0.0215 TMA arch
- Rectangular arch
- 0.022 x 0.028 or round 0.022
- NiTi spring

Standard contents of the kit

Ref: CAPI

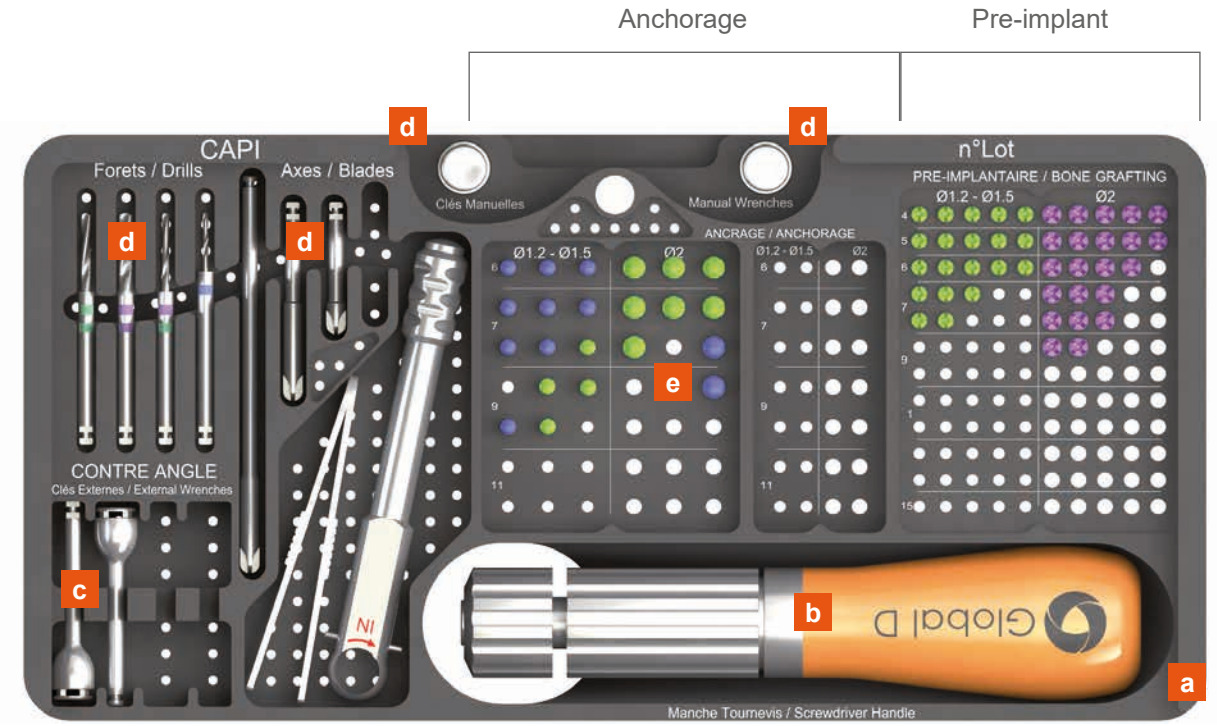

Standard contents of the kit

- **a** Autoclavable kit (CAPI)
- **b** 1 titanium screwdriver handle (MTM)
- **c** 2 bell wrenches
- **d** 1 manual bell wrench, 1 shaft or 1 drill bit
- **e** Mix of screws to be combined according to your needs

Also available:

- Pads
- Drill Bits
- Pointer
- Haemostatic bur
- Shafts

Fields of application

Implantology
Pre-implant surgery
Orthognathic surgery
Reconstructive surgery
Facial trauma surgery
Cancer surgery
Cranio-facial surgery
Orthodontics
Training

Global D
Partner for your surgery

ZI de Sacuny
118 avenue Marcel Mérieux
69530 Brignais
France

Phone +33 (0)4 78 56 97 00
Fax +33 (0)4 78 56 01 63

www.globald.com

A MENIX group company

00MC-ANCOTEK-EN-Ed1-18